iC-LO EVAL LO1D

EVALUATION BOARD DESCRIPTION

preliminary

ORDERING INFORMATION

Type	Order Designation	Description Options
Evaluation Board	iC-LO EVAL LO1D	iC-LO Evaluation Board ready to operate, accessible through GUI via USB including USB A-B cable
Software	iC-LO GUI	GUI software for Windows PC communication to iC-LO, program and read data see chapter EVALUATION SOFTWARE on page 6 for more information

BOARD LO1D AND TERMINAL DESCRIPTION

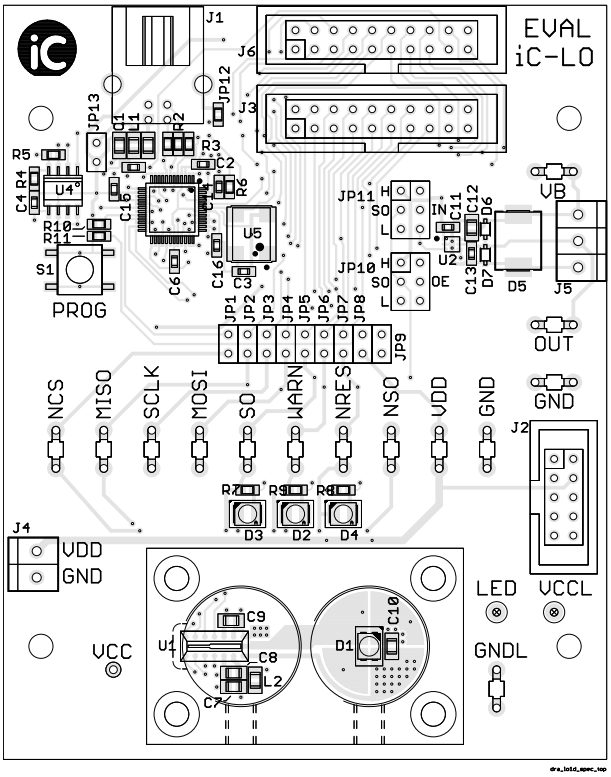

Figure 1: Component side (size 100 mm x 80 mm)

TERMINAL	DESCRIPTION
J1	USB Interface Connector ”B”
J2	SPI Interface for external SPI access
J3	SPI Interface and Device connector
J4	VDD Power Supply Terminals
J5	VB Field Supply + Output Terminal
J6	USB B/CBUS Interface connector
VB	VB Field Supply iC-DX +8 V to +30 V, ca. 100 mA
OUT	iC-DX Output
GND	GND iC-DX (= GND1 of J5)
VCC	Analogue Supply
VDD	Digital Supply
NCS	SPI Chip Select
MISO	Master Input Slave Output
SCLK	SPI Clock
MOSI	Master Output Slave Input
VDD	Digital Supply
SO	Switching Output
NSO	Antivalent Switching Output
WARN	Warning Output
NRES	Power-Down Reset
GND	Digital Ground
VCCL	LED Analogue Supply
LED	LED Driver Output
GNDL	LED Driver Ground

Copyright © 2012 iC-Haus

CIRCUIT DESCRIPTION

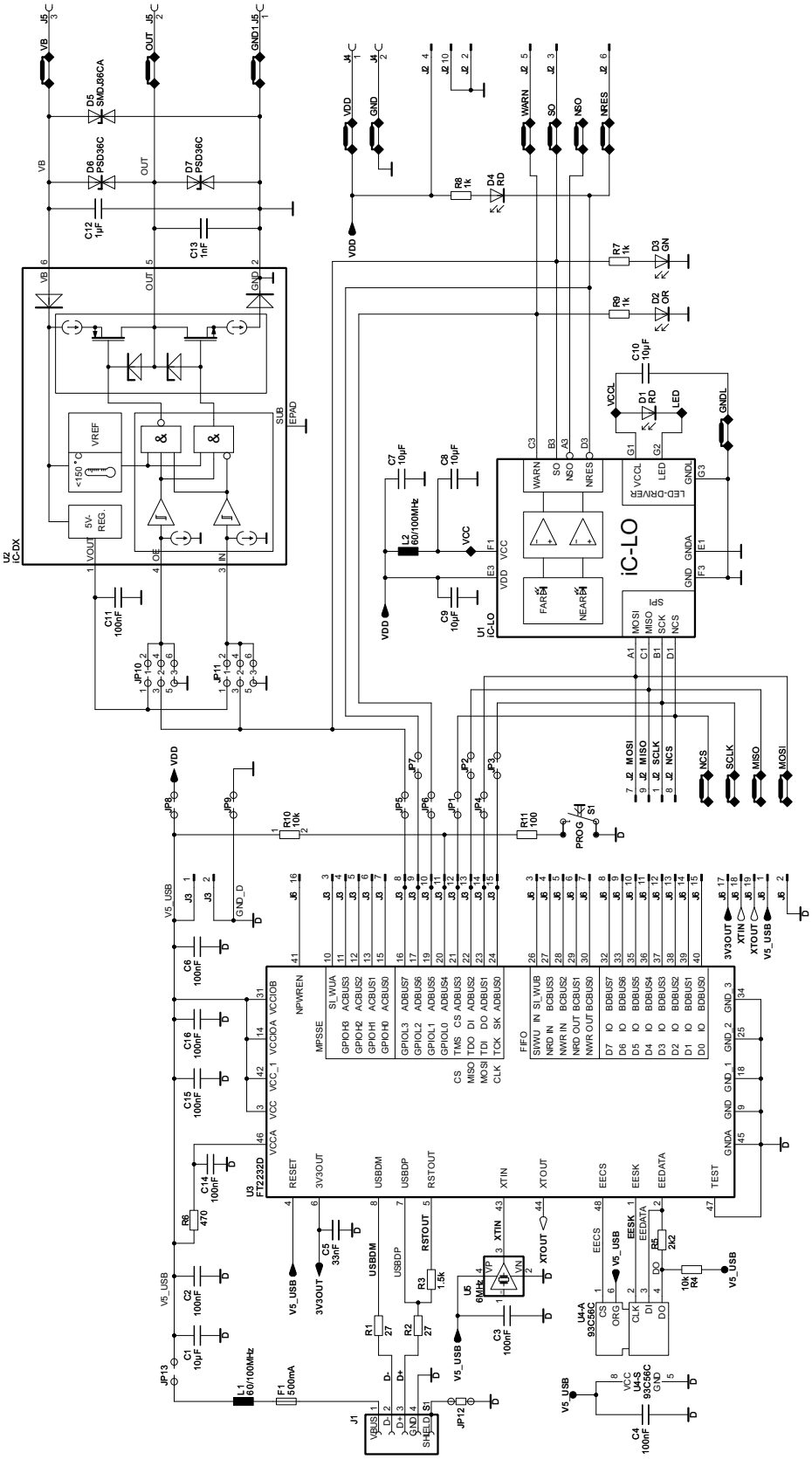

Figure 2: Circuit diagram

ASSEMBLY PART LIST

Device	Value (typical)	Comment
C1, C3, C7, C8, C9, C10	10 µF	Tantal 10 V, tolerance 20 %
C2, C4, C6, C11, C14-C16	100 nF	X7R 10 V, tolerance 10 %
C5	33 nF	X7R 10 V, tolerance 10 %
C12	1 µF	X7R 10 V, tolerance 10 %
C13	1 nF	X7R 10 V, tolerance 10 %
D1		Illumination LED (red) for sensor stimulus
D2		Indicator LED (orange) for WARN pin
D3		Indicator LED (green) for SO pin
D4		Indicator LED (red) for NRES pin
D5	SMDJ36CA D0214AB	
D6, D7	PSD36C	
F1	500 mA / 6 V	Fuse
J1	USB B	USB input connector
J2	WSL10	
J3, J6	WSL20	
J4	AKL059-2	
J5	AKL059-3	
JP10, JP11	SLLP10976G	Jumper
JP1 - JP9, JP13	SLLP10972G	Jumper
L1	40Ω/100 MHz	Ferrit bead
R1, R2	27 Ω	tolerance 5 %
R3	1.5 kΩ	tolerance 5 %
R4, R10, R11,	10 kΩ	tolerance 5 %
R5	2.2 kΩ	tolerance 5 %
R6	470 kΩ	tolerance 5 %
R7, R8, R9	1 kΩ	tolerance 5 %
R11	100 Ω	tolerance 5 %
S1	B3S-1000	
U1	iC-LO	Triangulation sensor
U2	iC-DX DFN6	I/O Output device
U3	FT2232	USB interface device
U4	93C56C	2K microwire EEPROM
U5	6 MHz	Crystal oscillator

BOARD AND CONNECTOR PINOUT

J1: USB signals
4-pin Connector - male

PIN	Name	Function
1	VBUS	5 V USB power
2	D-	USB Data -
3	D+	USB Data +
4	GND	5 V USB ground
S1	SHIELD	USB cable shield

J2: iC-LO SPI signals
10-pin Connector - male

PIN	Name	Function
1	SCKL	SPI Clock
2	GND	Digital Ground
3	SO	Switching Output
4	VDD	Digital Supply
5	WARN	Warning Output
6	NRES	Power-Down Reset
7	MOSI	Master Output Slave Input
8	NCS	SPI Chip Select
9	MISO	Master Input Slave Output
10	GND	Digital Ground

J3: iC-LO signals + USB Interface Signals
20-pin Connector - male

PIN	Name	Function
1	VDD	Digital Supply
2	GND	Digital Ground
3	SI_WA	USB Interface
4	ACBUS3	USB Interface
5	ACBUS2	USB Interface
6	ACBUS1	USB Interface
7	ACBUS0	USB Interface
8	SO	Switching Output
9	NRES	Power-Down Reset
10	WARN	Warning Output
11	PROG	PROG Button Input
12	NCS	SPI Chip Select
13	MISO	Master Input Slave Output
14	MOSI	Master Output Slave Input
15	SCKL	SPI Clock
16	n.c.	
17	n.c.	
18	n.c.	
19	n.c.	
20	n.c.	

J4: VDD Power Supply
2-pin Connector - female

PIN	Name	Function
1	VDD	Digital Supply
2	GND	Digital Ground

J5: Field Output Signals
3-pin Connector - female

PIN	Name	Function
1	GND	0V Ground
2	OUT	iC-DX Output
3	VB	VB Field Supply iC-DX

J6: USB Interface Signals
20-pin Connector - male

PIN	Name	Function
1	VDD	Digital Supply
2	GND	Digital Ground
3	INSI_WUB	USB Interface
4	BCBUS3	USB Interface
5	BCBUS2	USB Interface
6	BCBUS1	USB Interface
7	BCBUS0	USB Interface
8	DCBUS7	USB Interface
9	DCBUS6	USB Interface
10	DCBUS5	USB Interface
11	DCBUS4	USB Interface
12	DCBUS3	USB Interface
13	DCBUS2	USB Interface
14	DCBUS1	USB Interface
15	DCBUS0	USB Interface
16	NPWREN	USB Interface
17	3V3OUT	USB Interface
18	XTIN	USB Interface
19	XTOUT	USB Interface
20	n.c.	

Setup (LO1D connected via USB)
The LO1D evaluation board is equipped with the iC-LO triangulation sensor. The board features a USB connector (J1) for Windows PC communication and a 10-pin (J2) connector for communication with external SPI adapter, microcontroller SPI interface or SPI monitoring devices. Figure 1 shows the evaluation board LO1D.

iC-LO software can be used to access the board from a Windows PC (see section APPLICATION SOFTWARE for more details).

Note: Please install the latest USB driver before you attach the evaluation board to the PC.

JUMPER DESCRIPTION

Jumper	Pin 1	Pin 2	Default Setting
JP1	USB Interface	iC-LO NCS	Jumpered
JP2	USB Interface	iC-LO MISO	Jumpered
JP3	USB Interface	iC-LO SCK	Jumpered
JP4	USB Interface	iC-LO MOSI	Jumpered
JP5	USB Interface	iC-LO SO	Jumpered
JP6	USB Interface	iC-LO WARN	Jumpered
JP7	USB Interface	iC-LO NRES	Jumpered
JP8	<V5_USB> USB Interface voltage	<VDD> iC-LO VDD, VCC	Jumpered
JP9	USB Interface GND	GND	Jumpered
JP12	GND	USB Shield	Jumpered
JP13	<VBUS> USB voltage (+5 V)	<V5_USB> USB Interface voltage	Jumpered

Jumper	Pin 1	Pin 2	Open [1]
JP10	iC-DX VOUT	iC-DX OE	Open [1]
JP11	iC-DX VOUT	iC-DX IE	Open [1]

Jumper	Pin 3	Pin 4	Open [1]
JP10	iC-LO SO	iC-DX OE	Open [1]
JP11	iC-LO SO	iC-DX IE	Open [1]

Jumper	Pin 5	Pin 6	Open [1]
JP10	GND	iC-DX OE	Open [1]
JP11	GND	iC-DX IE	Open [1]

Notes [1]) Subject to individual iC-DX configuration

EVALUATION SOFTWARE

iC-LO software for PCs running on Windows operating systems, as well as the required USB driver are available as a ZIP file. iC-Haus software built with LabVIEW™ requires the installation of the LabVIEW™ Run-Time Engine (RTE). The RTE must be installed only once, hence there are two download links available.

Software overview online: http://www.ichaus.de/software

Download package	**without RTE (small size)**	**including RTE (big size)**
iC-LO:	http://www.ichaus.de/LO_gui	http://www.ichaus.de/LO_gui_rte

Features

- Reducing evaluation and design-in time and cost
- Reading and displaying of sensor data and status
- Manually setting up parameters of iC-LO
- Export and import iC-LO configuration parameters seetings to/from files
- Export of Software and User activity logbook to textfiles

Installation

After unzipping the iC-LO software package LO1SO_gui_xx resp. LO1SO_gui_xxrte, the following files are located in the selected working directory.
xx is a placeholder for revisions

→ Subfolder LO1SO_gui_xx including the executable setup.exe which starts the installation routine.
→ Driver packages for iC-LO evaluation board and/or other iC-Haus USB adapter devices.

Note: Administrator rights are required to run installations.

1. To access the iC-LO evaluation board, interface drivers for USB need to be installed. Before connecting the iC-LO evaluation board to your PC the driver installation must be completed successfully.
→ Execute the USB_xx.exe installation package and follow the on-screen instructions. This can take a few minutes.

1.1 When using an iC-Haus iC-LO evaluation board, it must to be connected to the PC after the driver installation, to complete the whole driver installation procedure.

2. Install the evaluation software LO1SO by executing the setup.exe located in the subfolder LO1SO_gui_xx.
→ Follow the on-screen instructions to finish the installation.

3. After installation the executable LO1SO_gui_xx.exe will be available in the selected working directory.
Figure 3 shows a screenshot of the evaluation software.
LabVIEW™ is a trademark of National Instruments

Figure 3: Evaluation software start-up window

Functions

The iC-LO software starts in *No Hardware* mode.
For a detailed description of the parameter settings please refer to iC-LO's Data Sheet. When moving the mouse cursor to a parameter input box, a tool tip is displayed identifying the corresponding parameter name as described in the specification.

The evaluation software is divided into five sections.

- Menu
- Header
- Sensor
- Parameter, Options, Hex Editor
- Status

1 Menu Section

	Menue item	Description
<File>	Save Config File	Exports configuration to ".hex" file
	Load Config File	Imports ".hex configuration file
	Exit	Quits the software
<Interface>	No Hardware	Switches to *No Hardware* mode to reset the communication between the PC and the iC-LO evaluation board
	iC-Interface ↔ USB	Connection to evaluation board LO1D via USB
<Extras>	Parameter search	Activates search parameter function
	About	Additional software information

Figure 4: Evaluation software: menue section

2 Header Section Project title, software version, chip revision and connection state

Figure 5: Evaluation software: header section

3 Sensor Section

Reading and displaying of sensor data

Button/Value	Description
Status Read	Reads sensor status
enable continuous read	Reads sensor status continuously
KD[0. . . 3]	Last measurement results
SOI	Last output status
SO	Sensor signal output
TII	Transimpedance

Figure 6: Evaluation software: sensor section

4 Parameter Section (Parameters)

Reading and writing Parameter configuration

Button/Value	Description
SPF	Diode distribution OBF = ”Object far”
POTF	Digital potentiometer OBF = ”Object far”
SPN	Diode distribution OBF = ”Object near”
POTN	Digital potentiometer OBF = ”Object near”
THSW	Threshold Sum Comparator Warning
THSE	Threshold Sum Comparator Error
DISHYS	Hysteresis deactivation
HYSD	Comparator hysteresis *difference*
HYSS	Comparator hysteresis *sum*

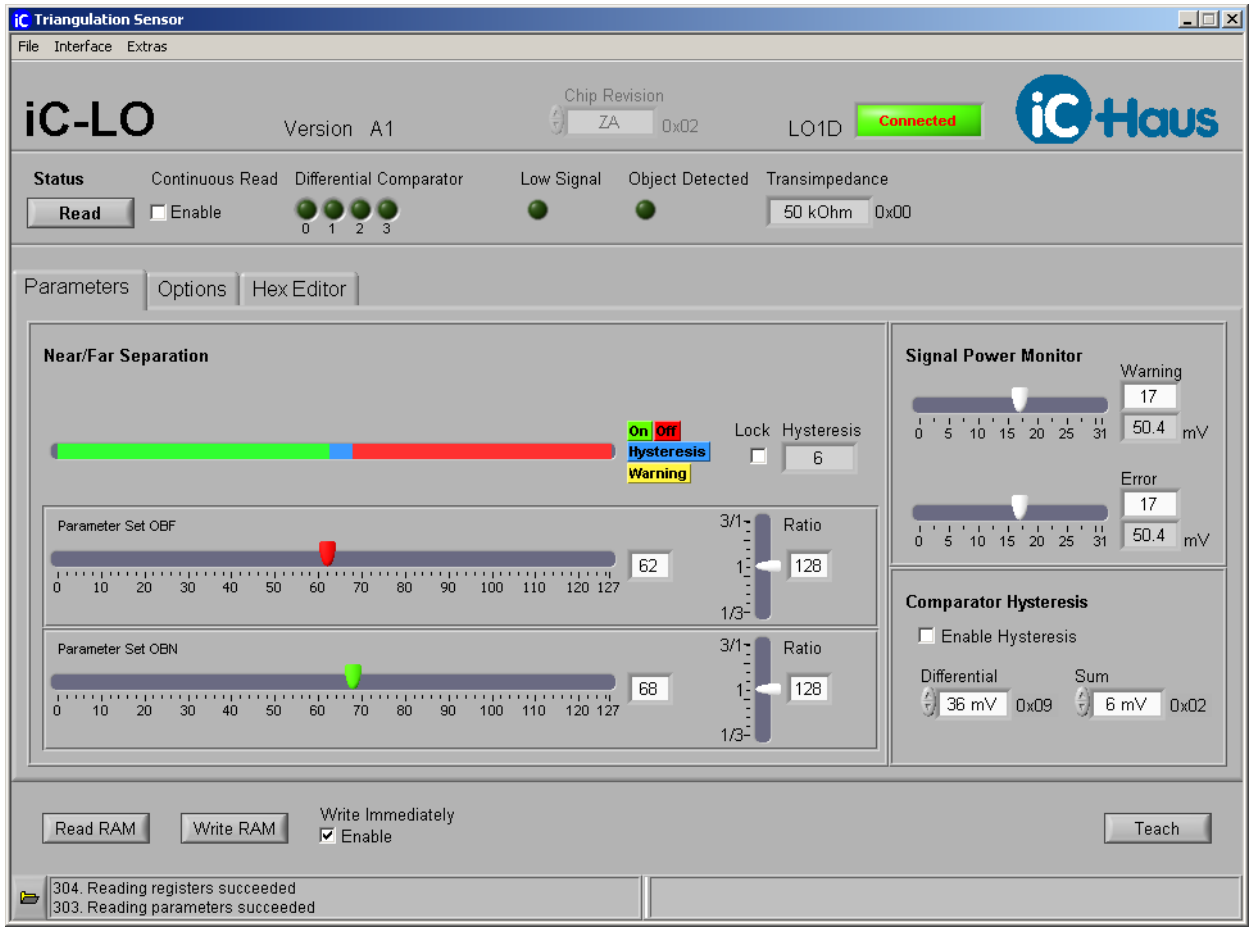

Figure 7: Evaluation software: parameter tab

4 Parameter Section (Options)

Reading and writing Parameter configuration

Button/Value	Description
OP	Operating mode
TIM	Transimpedance Mode
OSC	Frequency trimming
LCO	Configuration LED output type
LCC	Current in LED (low-side driver)
PER	Pulse frequency
PW	Pulse width
FIN	Number of averaged measurements
FIM	Number of measurements complementary to current comparator state
SKO	Sample point
SOEN	Output enable
SOCNO	Output configuration
TAR	Turn-on delay
TAF	Minimum on-time

Figure 8: Evaluation software: option tab

4 Parameter Section (Hex Editor)

Reading and writing Parameter configuration

Button/Value	Description
Read Register	Reads Hex content from all iC-LO registers
Write Register	Writes Hex content from all iC-LO registers
Register 0x00. . . 0x14	Writes hex content typed into this register adress
Clear	Makes all register entries void

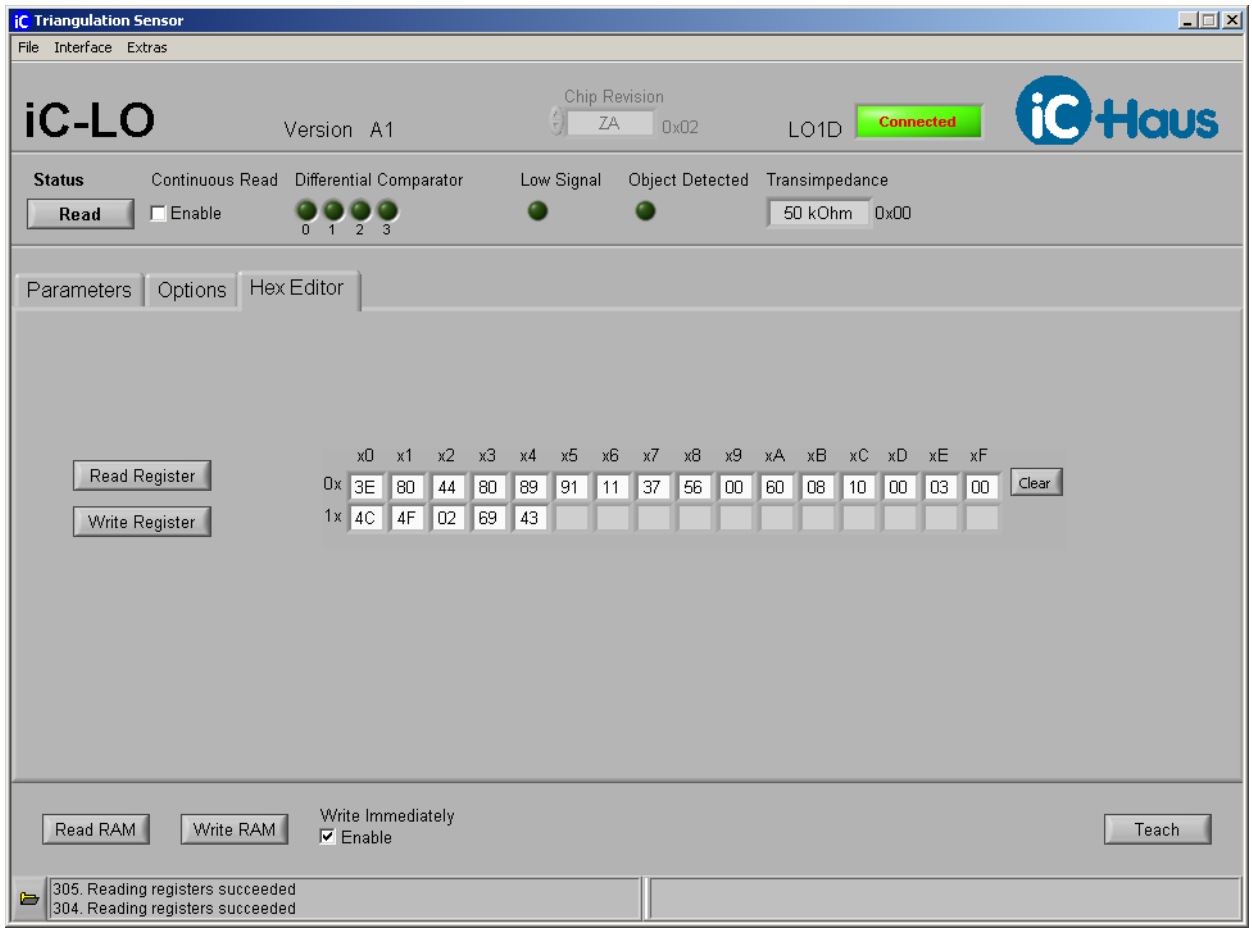

Figure 9: Evaluation software: hex editor tab

4 RAM Section

Reading and writing parameter configuration

Button/Value	Description
Read RAM	Reads connected device RAM and displays all values
Write RAM	Writes all displayed values into connected device RAM
Write Immediately	All changes values are immediately written to connected device
Search	Searches parameter on software and highlights tab and position of parameter Searches parameter needs to be activated with menue item
Teach	Teaches existing Object (see application note)

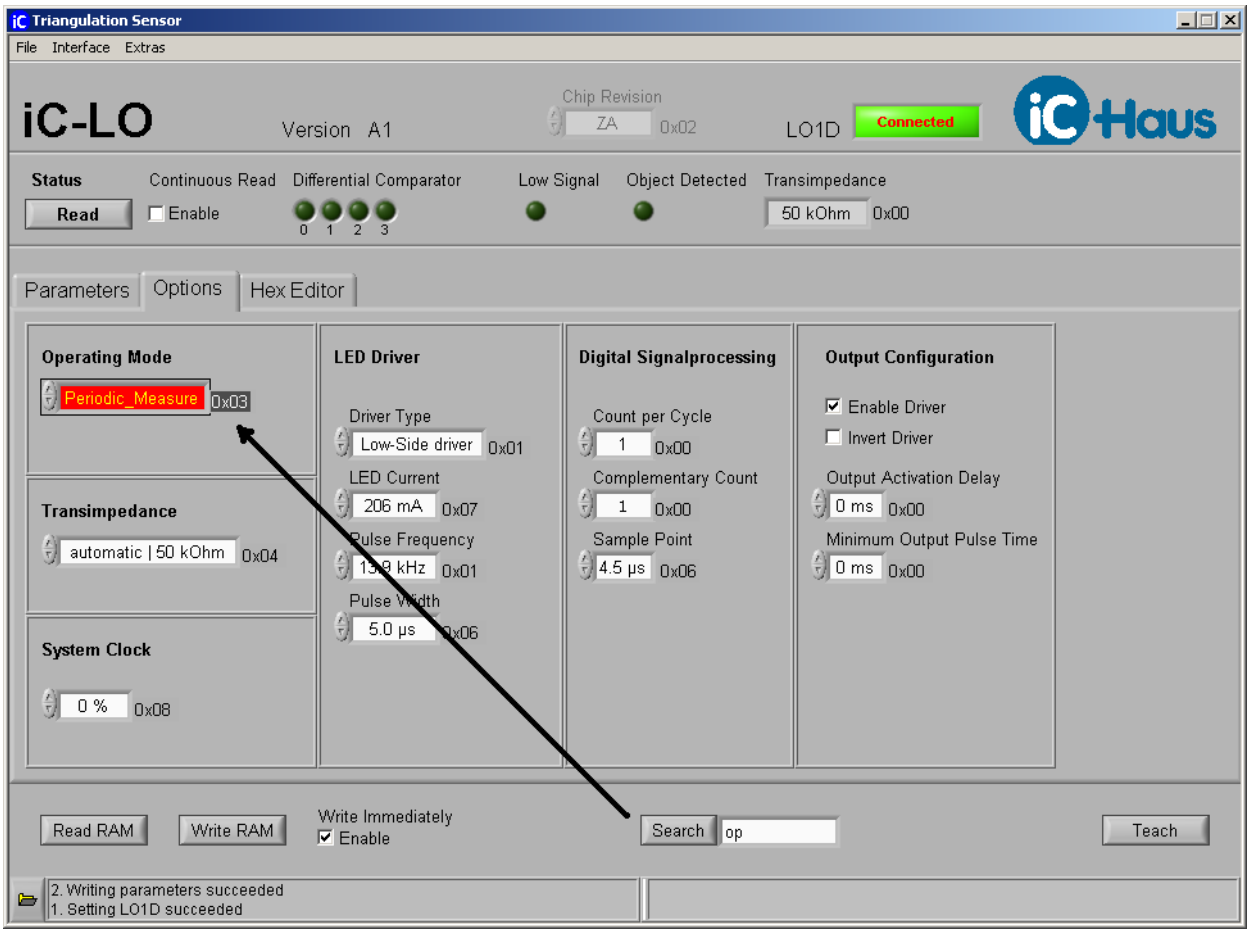

Figure 10: Evaluation software: search parameter selects tab and highlights parameter

5 Status Section

Displaying feedback of user interaction
Status history exportable to text file

For parameter identification, place mouse pointer above parameter referring to iC-LO data sheet parameter name. For parameter settings, please refer to iC-LO data sheet for a detailed description.

Figure 11: Evaluation software: status section

RELATED DOCUMENTS

- iC-LO Data Sheet - Specification -
- iC-LO GUI - GUI software for Windows PC -
- iC-LO DLL - Library Description -
  → http://www.ichaus.de/iC-LO

- iC-DX Data Sheet - Specification -
  → http://www.ichaus.de/iC-DX

REVISION HISTORY

Rev	Notes	Pages affected
A1	Initial version	

iC-Haus expressly reserves the right to change its products and/or specifications. An info letter gives details as to any amendments and additions made to the relevant current specifications on our internet website www.ichaus.de/infoletter; this letter is generated automatically and shall be sent to registered users by email.
Copying – even as an excerpt – is only permitted with iC-Haus' approval in writing and precise reference to source.
iC-Haus does not warrant the accuracy, completeness or timeliness of the specification and does not assume liability for any errors or omissions in these materials.
The data specified is intended solely for the purpose of product description. No representations or warranties, either express or implied, of merchantability, fitness for a particular purpose or of any other nature are made hereunder with respect to information/specification or the products to which information refers and no guarantee with respect to compliance to the intended use is given. In particular, this also applies to the stated possible applications or areas of applications of the product.
iC-Haus conveys no patent, copyright, mask work right or other trade mark right to this product. iC-Haus assumes no liability for any patent and/or other trade mark rights of a third party resulting from processing or handling of the product and/or any other use of the product.
As a general rule our developments, IPs, principle circuitry and range of Integrated Circuits are suitable and specifically designed for appropriate use in technical applications, such as in devices, systems and any kind of technical equipment, in so far as they do not infringe existing patent rights. In principle the range of use is limitless in a technical sense and refers to the products listed in the inventory of goods compiled for the 2008 and following export trade statistics issued annually by the Bureau of Statistics in Wiesbaden, for example, or to any product in the product catalogue published for the 2007 and following exhibitions in Hanover (Hannover-Messe).
We understand suitable application of our published designs to be state-of-the-art technology which can no longer be classed as inventive under the stipulations of patent law. Our explicit application notes are to be treated only as mere examples of the many possible and extremely advantageous uses our products can be put to.