# iC-DXC

## DIGITAL SENSOR I/O DRIVER

preliminary



## FEATURES

- Configurable high-side, low-side and push-pull operation
- 200 mA output current
- I/O-Link complaint
- 5 µs input filter for spike suppression
- Reverse polarity protection
- Current limited output (< 450 mA)
- Wide supply voltage range from 8 to 30 V
- Driver shut-down with over temperature
- Integrated free-wheeling diode for inductive loads
- Sensor supply voltage output of 5 V at 10 mA

## APPLICATIONS

- Digital sensors
- Light barriers
- Proximity switches

## PACKAGES

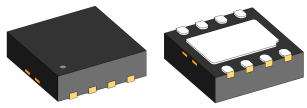

DFN8 3x3

## BLOCK DIAGRAM

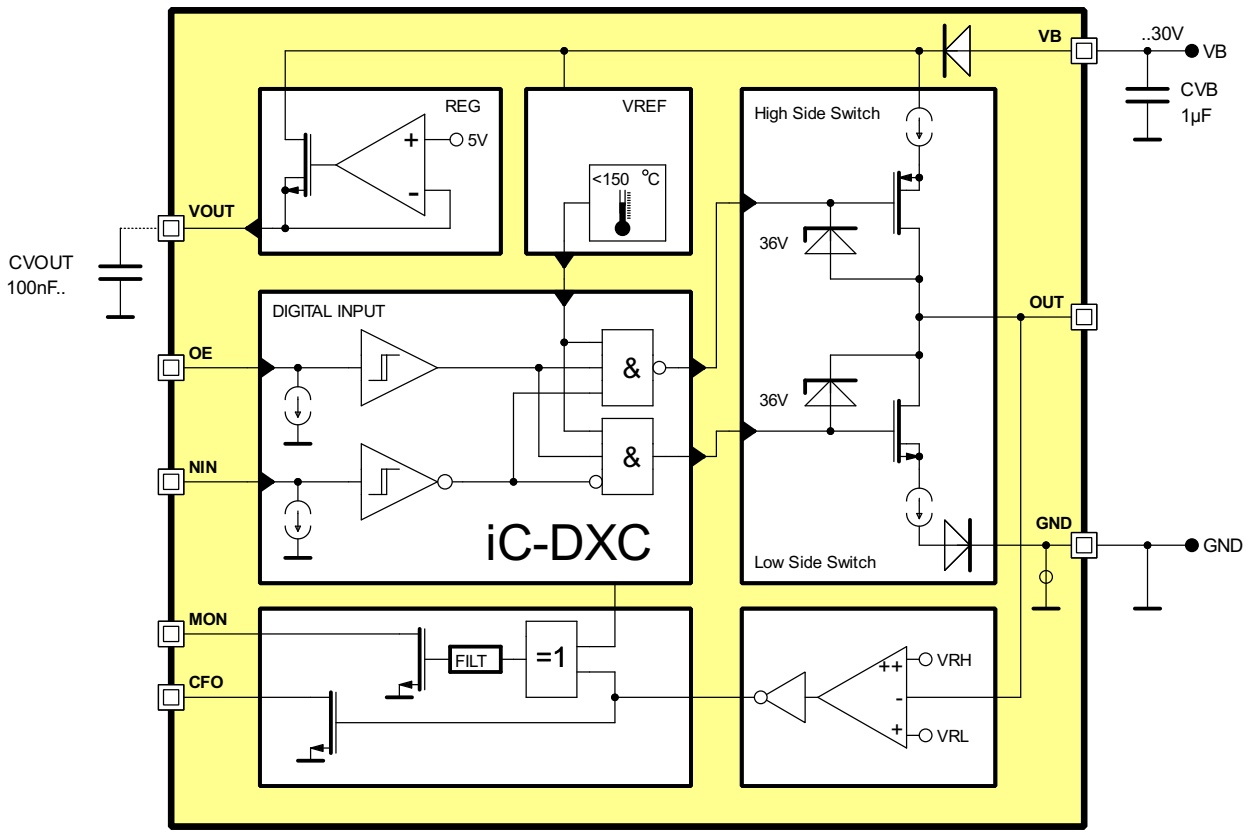


Copyright © 2011 iC-Haus

## DESCRIPTION

The iC-DXC is a simple I/O circuit capable of driving ohmic, inductive and capacitive loads and features integrated reverse polarity protection.

The output current is at least 200 mA from a supply voltage of 8 to 30 V.

With input OE = high the output works as a push-pull driver controlled by pin NIN. If pin NIN is set either to low or high, the output acts as a high-side (PNP) or low-side (NPN) driver respectively, controlled by the input OE.

Forcing the output pin OUT from his current state is signaled at pin MON. This can be used to implement an IO-Link Wake-Up detection.

Output transitions are slew-rate limited to reduce interference.

The output is current limited to 450 mA and short circuit proof by shutting down the driver with excessive temperature.

A regulated 5 V low power supply is available at pin VOUT to supply external circuitry with up to 10 mA.

## PACKAGES DFN8 3x3

### PIN CONFIGURATION

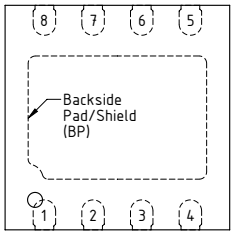


### PIN FUNCTIONS

| No. | Name | Function |
|---|---|---|
| 1 | VOUT | Regulated +5 V Voltage |
| 2 | MON | Monitor Output |
| 3 | GND | Ground |
| 4 | NIN | Input |
| 5 | OE | Output Enabled |
| 6 | CFO | Feedback Channel Output |
| 7 | OUT | Driver Output |
| 8 | VB | Supply Voltage |

## PACKAGE DIMENSIONS

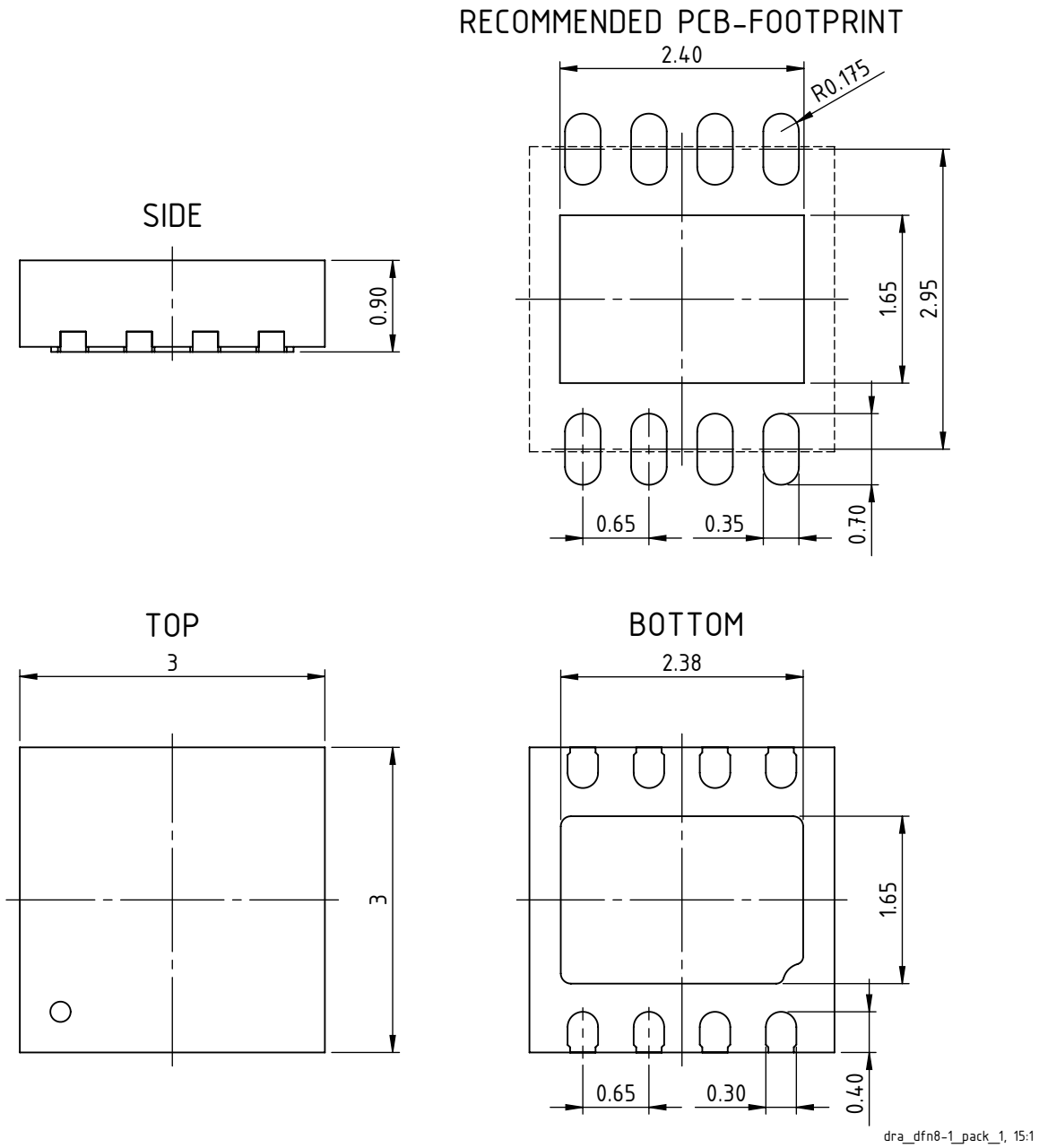


All Dimensions in mm.

## ABSOLUTE MAXIMUM RATINGS

Beyond these values damage may occur; device operation is not guaranteed. Absolute Maximum Ratings are no operating conditions! Integrated circuits with system interfaces, e.g. via cable accessible pins (I/O pins, line drivers) are per principle endangered by injected interferences, which may compromise the function or durability. The robustness of the devices has to be verified by the user during system development with regards to applying standards and ensured where necessary by additional protective circuitry. By the manufacturer suggested protective circuitry is for information only and given without responsibility and has to be verified within the actual system with respect to actual interferences.

| Item No. | Symbol | Parameter | Conditions | Min. | Max. | Unit |
|---|---|---|---|---|---|---|
| G001 | VB | Supply Voltage | Referenced to lowest voltage of GND, OUT<br>Referenced to highest voltage of GND, OUT | <br>-36 | 36 | V<br>V |
| G002 | OUT | OUT Voltage | Referenced to lowest voltage of VB, GND<br>Referenced to highest voltage of VB, GND | <br>-36 | 36 | V<br>V |
| G003 | GND | GND Voltage | Referenced to lowest voltage of VB, OUT<br>Referenced to highest voltage of VB, OUT | <br>-36 | 36 | V<br>V |
| G004 | Es() | Maximum Surge Energy as indication for external protection design | Single pulse test between each pins of VB, OUT or GND. Pulse magnitude less than 55 V, duration less than 100 µs | | 6.5 | mJ |
| G005 | Vd() | ESD Susceptibility at all pins | HBM, 100 pF discharged through 1.5 kΩ | | 2 | kV |
| G006 | Tj | Junction Temperature | | -40 | 150 | °C |
| G007 | Ts | Storage Temperature | | -40 | 150 | °C |

## THERMAL DATA

Operating Conditions: VB = 8..30 V

| Item No. | Symbol | Parameter | Conditions | Min. | Typ. | Max. | Unit |
|---|---|---|---|---|---|---|---|
| T01 | Ta | Operating Ambient Temperature Range | no thermal shutdown | -40 | | +150 | °C |

All voltages are referenced to ground unless otherwise stated.
All currents flowing into the device pins are positive; all currents flowing out of the device pins are negative.

## ELECTRICAL CHARACTERISTICS

Operating Conditions: VB = 8...30 V, Tj = -40...150 °C, unless otherwise stated

| Item No. | Symbol | Parameter | Conditions | Min. | Typ. | Max. | Unit |
|---|---|---|---|---|---|---|---|
| **Total Device** | | | | | | | |
| 001 | Vc()lo | Clamp Voltage lo at NIN, OE, VOUT | I() = -1 mA | -1.4 | | | V |
| 002 | VB | Permissible Supply Voltage | Referenced to GND | 8 | 24 | 30 | V |
| 003 | I(VB) | Supply Current in VB | no load,<br>NIN = hi, OE = lo<br>NIN = hi, OE = hi<br>NIN = lo, OE = hi | | | <br>1.2<br>1.4<br>1.6 | <br>mA<br>mA<br>mA |
| 004 | V(VB)on | Turn-on threshold | increasing VB | 6 | | 8 | V |
| 005 | Ilk(GND)rp | Reverse Polarity Leakage Current | V(VB) = 0; V(OUT) = 0; V(GND)= 0...30 V | | | 300 | uA |
| 006 | Ilk(OUT)rp | Reverse Polarity Leakage Current | V(VB)=0;V(GND)=0; V(OUT)= 0...30 V | | | 300 | uA |
| 007 | Ilk(VB)rp | Reverse Polarity Leakage Current | V(OUT) =0 ; GND open; ; V(VB)= 0...30 V | | | 300 | uA |
| **Output characteristics** | | | | | | | |
| 101 | Vs(OUT)lo | Saturation voltage Low-Side driver | NIN = hi, OE = hi<br>I(OUT) = 100 mA<br>I(OUT) = 200 mA | | | <br>1.5<br>2.1 | <br>V<br>V |
| 102 | Vs(OUT)hi | Saturation voltage High-Side driver | NIN = lo, OE = hi<br>I(OUT) = -100 mA<br>I(OUT) = -200 mA | <br>-1.5<br>-2.1 | | | <br>V<br>V |
| 103 | Isc()lo | Short-Circuit Current lo in OUT | V(OUT) = 3...VB | 200 | | 450 | mA |
| 104 | Isc()hi | Short-Circuit Current Hi in OUT | V() = 0...VB – 3 V | -450 | | -200 | mA |
| 105 | Ilk() | Leakage Current at OUT | OUTPUT Disabled<br>V(OUT) = -6...0 V<br>V(OUT) = 0...VB<br>V(OUT) > VB...30 V | <br>-100<br>-40<br>0 | | <br>0<br>40<br>100 | <br>µA<br>µA<br>µA |
| 106 | SR() | Slew Rate (switch off → on, switch on → off ) | VB = 30 V, Cl = 2.2 nF, I(OUT) = 0 | | | 40 | V/µs |
| 107 | Vfw(OUT)lo | Freewheeling Voltage | I(OUT) = -1 mA,<br>with reference to VB | -47 | | -36 | V |
| 108 | Vfw(OUT)hi | Freewheeling Voltage | I(OUT) = 1 mA,<br>with reference to GND | 36 | | 47 | V |
| **Temperature Monitor** | | | | | | | |
| 201 | Toff | Over-temperature shutdown | increasing Tj | 150 | | 180 | °C |
| **Inputs OE, NIN** | | | | | | | |
| 301 | Vt()hi | Input Threshold Voltage hi at NIN, OE | | | | 2 | V |
| 302 | Vt()lo | Input Threshold Voltage lo at NIN, OE | | 0.8 | | | V |
| 303 | Vt()hys | Hysteresis at NIN, OE | Vt()hys = Vt()hi – Vt()lo | 200 | | | mV |
| 304 | Ipd() | Pull-Down Current at NIN, OE | V() > 0.4 V | 2 | | 150 | µA |
| 305 | tpio | Propagation Delay NIN, OE → OUT | | 2.1 | | 6.5 | µs |
| 306 | tsup() | Permissible Spurious Pulse Width at NIN, OE | | | | 1.6 | µs |
| 307 | ttrig() | Required Pulse Width at NIN, OE | | 4 | | | µs |
| **REG Series Regulator** | | | | | | | |
| 401 | V(VOUT) | Regulated output voltage | VB = 9...30 V, I(VOUT) = 10...0 mA<br>VB = 8...9 V, I(VOUT) = 10...0 mA | 4.7<br>4.5 | | 5.3<br>5.3 | V<br>V |
| 402 | C(VOUT) | Capacitor at VOUT | I(VOUT) = 0<br>I(VOUT) > 0 | 0<br>0.1 | | 10<br>10 | µF<br>µF |
| 403 | Isc(VOUT) | Short circuit current at VOUT | VOUT connected to GND | | | -125 | mA |

## ELECTRICAL CHARACTERISTICS

Operating Conditions: VB = 8...30 V, Tj = -40...150 °C, unless otherwise stated

| Item No. | Symbol | Parameter | Conditions | Min. | Typ. | Max. | Unit |
|---|---|---|---|---|---|---|---|
| **Feedback Channel** | | | | | | | |
| 501 | Vt1(OUT)hi | Input Threshold 1 hi at OUT | VB < 18 V | 59 | 66 | 74 | %VBR |
| 502 | Vt1(OUT)lo | Input Threshold 1 lo at OUT | VB < 18 V | 44 | 50 | 56 | %VBR |
| 503 | Vt2(OUT)hi | Input Threshold 2 hi at OUT | VB > 18 V | 10 | 11.3 | 12.5 | V |
| 504 | Vt2(OUT)lo | Input Threshold 2 lo at OUT | VB > 18 V | 8.3 | 9 | 10.5 | V |
| 505 | Vt()hys | Hysteresis | Vt(OUT)hys = Vt(OUT)hi − Vt(OUT)lo | 1 | | | V |
| 506 | tpcf | Propagation Delay OUT → CFO | V(CFO) = 10 ↔ 90% | 1 | | 5 | µs |
| 507 | Vs()lo | Saturation Voltage lo at CFO/MON | I(CFO/MON) = 1.0 mA | | | 0.4 | V |
| 508 | Isc()lo | Short Circuit Current lo in CFO/MON | V(CFO/MON) = 0.4 V...VOUT | 1 | | 50 | mA |
| 509 | Ilk() | Leakage Current at CFO | Open collector mode, V(CFO) = 0 V...VOUT, CFO = off | -10 | | 10 | µA |
| 510 | tdre | Propagation Delay OUT → MON | Short-circuit | 5.5 | | 14 | us |

## DESCRIPTION OF FUNCTIONS

iC-DXC is a current limited switching channel which enables digital sensors to drive peripheral elements. They are designed to cope with high driver currents. The switches are reverse-polarity protected, feature a free-wheeling circuit for inductive loads, and a current limited output.

### Reverse polarity protection

The pins VB, OUT an GND on the *line side* of the chip are reverse polarity protected. As far as the maximum voltage ratings are not exceeded, no possible supply combination at the *line side* pins can damage the chip.

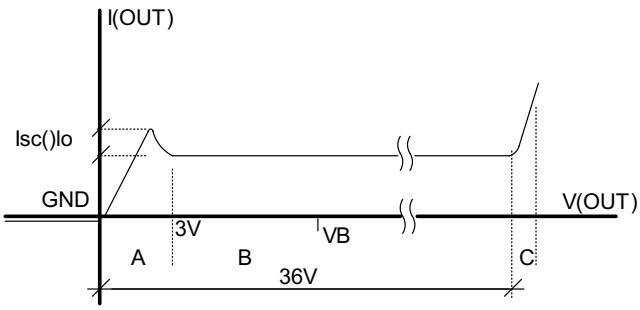


Figure 1: OUT characteristic when Low side active

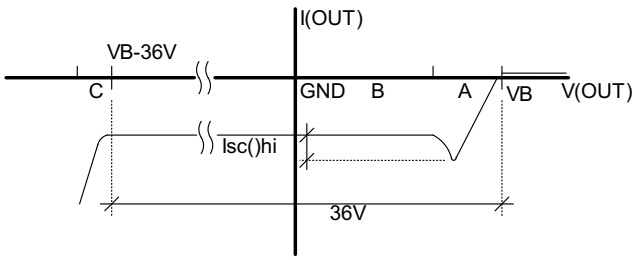


Figure 2: OUT characteristic when high side active

### Output characteristics of OUT

The switching channel is current limited to a value between 150mA and 450mA. (cf. Electrical Characteristics Nos. 103, 104). The current limitation works only for voltages higher than 3 V at OUT resp. lower than VBO − 3 V. For smaller output voltages the current limitation is reduced in order to minimize the saturation voltages without increasing the power dissipation. Figures 1 and 2 show the characteristic of the switching channels when activated. Region "A" is the saturation range, where the current limitation is not fully active yet and region "B" is the current limited range. Region "C" corresponds to the free-wheeling circuit activated. The switching channel is designed so that the low side can only sink current and high side can only source current (no reverse current).

### Free-wheeling circuit for inductive loads

The free-wheeling circuit is always present and does not depend on the current output status. It is activated by voltages higher than 36 V at OUT referenced to GND or lower than -36 V at OUT referenced to VB. In that case the correspondent channel will switch on without current limitation (see Figure 3).

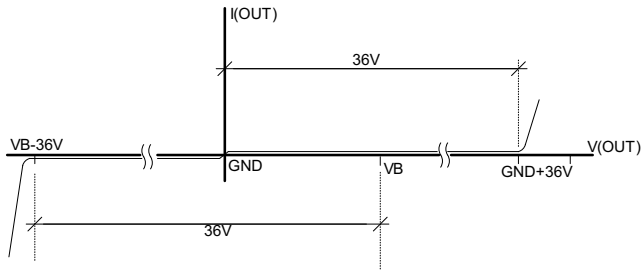


Figure 3: Free-wheeling characteristic

## OPERATING MODES

The iC-DXC can be operated in high-side (PNP), low-side (NPN) and push-pull (PP) switch mode. Figure 4 shows the high-side operation where NIN pin must be kept low and the OE pin controls the switch. Figure 5 shows the low-side operation where NIN pin must be kept high and the OE pin controls the switch. Figure 6 shows the push-pull operation where OE pin must be kept high and the NIN pin controls the switch. If the OUT signal differs from what declared in tables 4, 5 and 6 (due to external forcing) for more than 14 µs (cf. Electrical Characteristics No. 510), this event will be signalled by a low level at MON output. In case of a short circuit at OUT and resulting temperature shut-down, logic level of MON will be undefined.

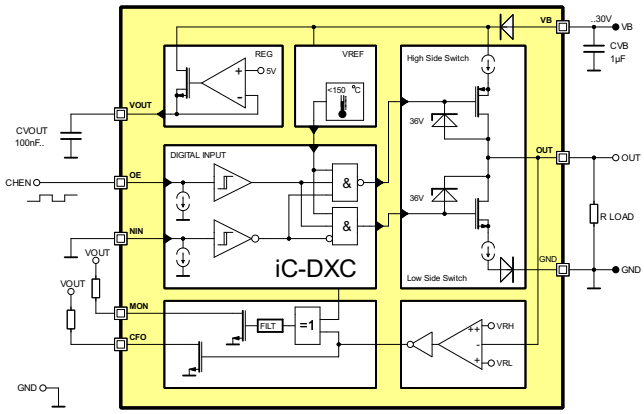


Figure 4: Configuration as High-Side (PNP-Switch)

| Output Table. High-side mode (PNP-Switch) | | | | |
|---|---|---|---|---|
| OE | NIN | OUT | CFO | Mode |
| L | L | Z (L) | H | High-Side, passive pull down |
| H | L | H | L | High-Side, active pull up |

Table 4: Output Function table Fig. 4. High-side mode (PNP-Switch) with external pull-down.

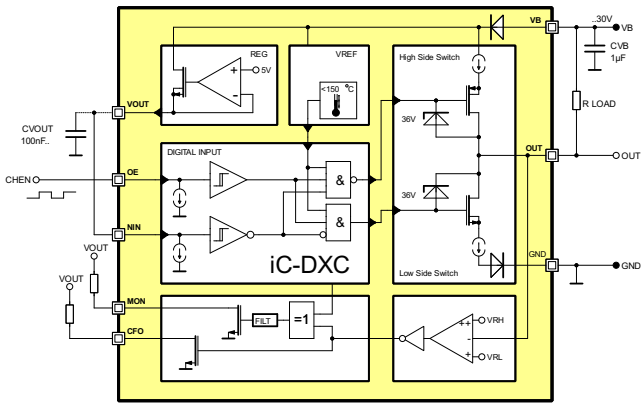


Figure 5: Configuration as Low-Side (NPN-Switch)

| Output Table. Low-side mode (NPN-Switch) | | | | |
|---|---|---|---|---|
| OE | NIN | OUT | CFO | Mode |
| L | H | Z (H) | L | Low-Side, passive pull up |
| H | H | L | H | Low-Side, active pull down |

Table 5: Output Function table Fig. 5. Low-side mode (NPN-Switch) with external pull-up.

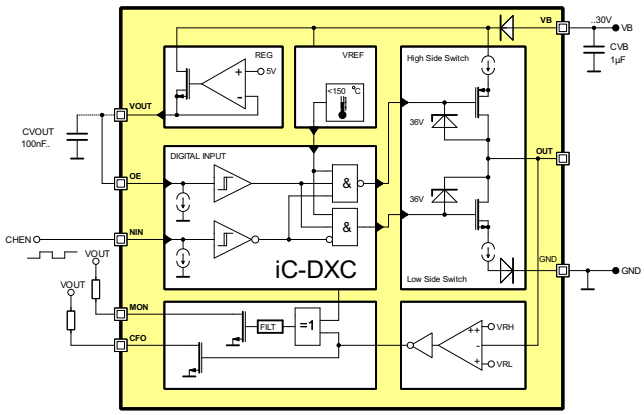


Figure 6: Configuration as Pushpull

| Output Table. Push-Pull mode | | | | |
|---|---|---|---|---|
| OE | NIN | OUT | CFO | Mode |
| H | H | L | H | Push-Pull, active pull down |
| H | L | H | L | Push-Pull, active pull up |

Table 6: Output Function table Fig. 6. Push-Pull mode

## CIRCUIT PROTECTION

The iC-DXC is reverse polarity protected via internal circuitry. As far as the maximum voltage ratings are not exceeded, no possible supply combination at the line side pins (VB, GND and OUT) can damage the chip.

Since the chip current consumption is relatively low, discharging of the backup capacitor C1 can be very slow, and injected charge through disturbances may in general result in capacitor voltage exceeding maximum ratings, leading to malfunction or destruction of circuitry and associated parts. Thus EMC requirements will afford more external circuitry. Figure 7 shows the iC-DXC with the additional protective device D1, D2 and D3.

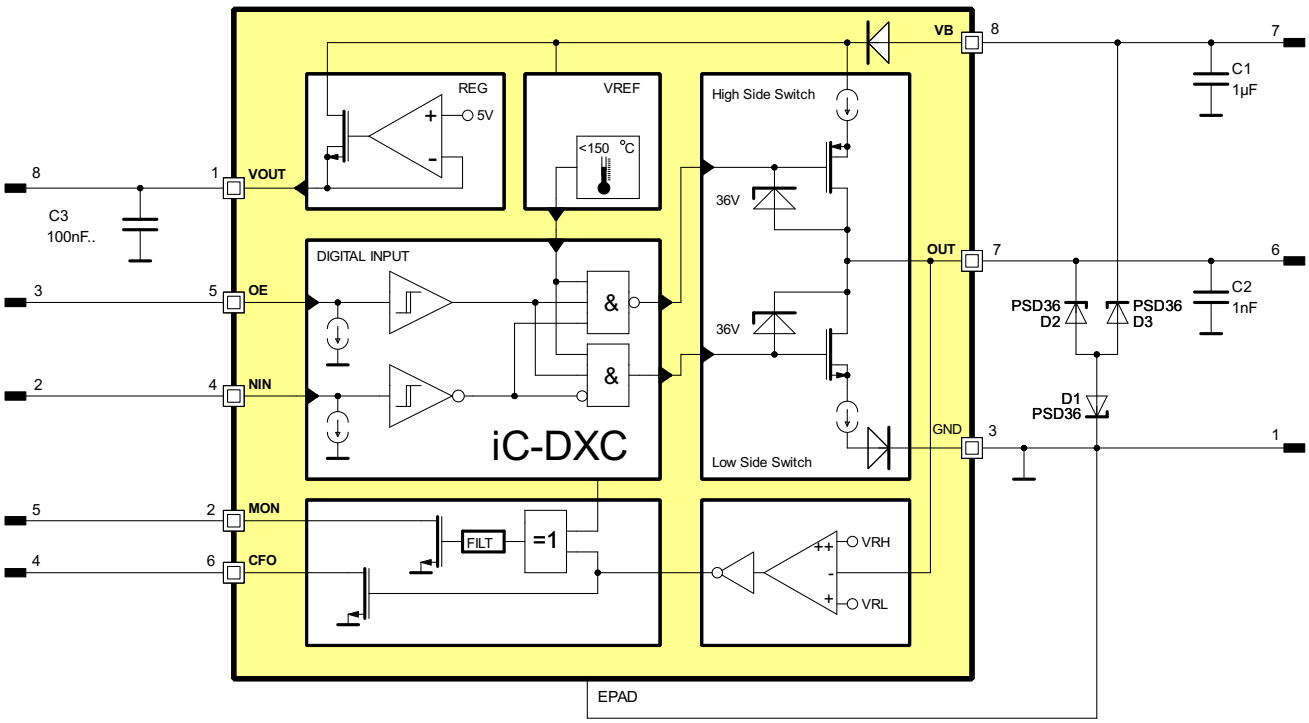


Figure 7: Circuit schematic showing protective devices

For over-voltage protection, the suppressor diodes D1,D2 and D3 absorbs transients on supply line injected externally on the cable. Clamp voltage of the diodes should be rated slightly above maximum specified supply voltage.
These currents can be passed to ground or to VB by the internal ESD diodes of the iC-DXC. Whereas negative current injection will simply be drained off to ground, positive current injection will charge capacitor C1 further to higher voltages. If not suppressor diodes nor any other over-voltage protection is implemented, the backup capacitor C1 should be kept small. A typical 100nF value is normally OK.

### Suggested protective devices

At $VB_{max}$ of 36V, suppressor diodes with a breakdown voltage from 36V has to be chosen in order to minimize the energy in iC-DXC for higher Voltages. For example Diode type like Vishay GSOT36C or PJSD36W from Panjit should be enough as protection.

## TIMING DESCRIPTION

The iC-DXC has a built-in spurious pulse suppression that prevents short (undesired) pulses at the input pins from reaching the output. Every pulse at OE or NIN pins shorter than 1.6 µs (cf. Electrical Characteristics No. 306) will be ignored and the output will not react. The minimum required pulse length to be sure that the output reacts is 4 µs (cf. Electrical Characteristics No. 307). That means that every pulse longer than 4 µs will be propagated to the output but with an additional propagation delay of 1.2 µs maximum. The resulting maximum propagation delay is 5.2 µs (cf. Electrical Characteristics No. 305).

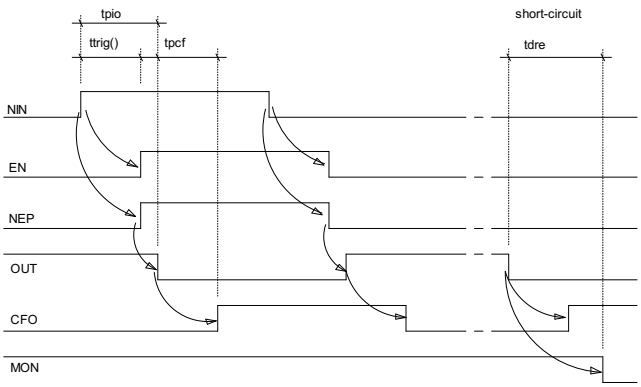


Figure 8: Timing diagram in push-pull operation mode with OE high

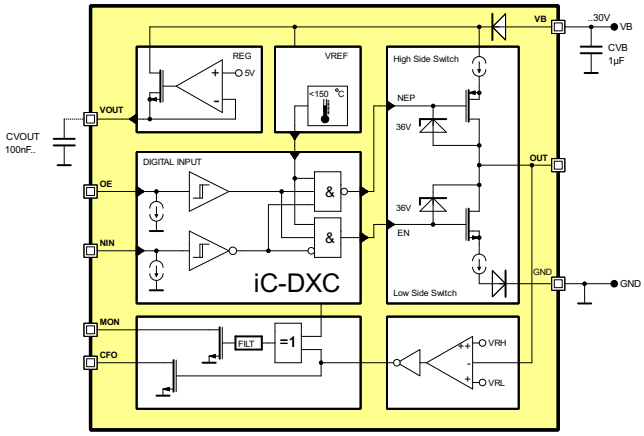


Figure 9: Block diagram with EN and NEP internal signals

iC-Haus expressly reserves the right to change its products and/or specifications. An info letter gives details as to any amendments and additions made to the relevant current specifications on our internet website www.ichaus.de/infoletter; this letter is generated automatically and shall be sent to registered users by email.
Copying – even as an excerpt – is only permitted with iC-Haus' approval in writing and precise reference to source.
iC-Haus does not warrant the accuracy, completeness or timeliness of the specification and does not assume liability for any errors or omissions in these materials.
The data specified is intended solely for the purpose of product description. No representations or warranties, either express or implied, of merchantability, fitness for a particular purpose or of any other nature are made hereunder with respect to information/specification or the products to which information refers and no guarantee with respect to compliance to the intended use is given. In particular, this also applies to the stated possible applications or areas of applications of the product.
iC-Haus conveys no patent, copyright, mask work right or other trade mark right to this product. iC-Haus assumes no liability for any patent and/or other trade mark rights of a third party resulting from processing or handling of the product and/or any other use of the product.
As a general rule our developments, IPs, principle circuitry and range of Integrated Circuits are suitable and specifically designed for appropriate use in technical applications, such as in devices, systems and any kind of technical equipment, in so far as they do not infringe existing patent rights. In principle the range of use is limitless in a technical sense and refers to the products listed in the inventory of goods compiled for the 2008 and following export trade statistics issued annually by the Bureau of Statistics in Wiesbaden, for example, or to any product in the product catalogue published for the 2007 and following exhibitions in Hanover (Hannover-Messe).
We understand suitable application of our published designs to be state-of-the-art technology which can no longer be classed as inventive under the stipulations of patent law. Our explicit application notes are to be treated only as mere examples of the many possible and extremely advantageous uses our products can be put to.

## ORDERING INFORMATION

| Type | Package | Order Designation |
|---|---|---|
| iC-DXC | DFN8 3x3 mm | iC-DXC DFN8 3x3 |

For technical support, information about prices and terms of delivery please contact:

**iC-Haus GmbH**
**Am Kuemmerling 18**
**D-55294 Bodenheim**
**GERMANY**

**Tel.: +49 (61 35) 92 92-0**
**Fax: +49 (61 35) 92 92-192**
**Web: http://www.ichaus.com**
**E-Mail: sales@ichaus.com**

**Appointed local distributors: http://www.ichaus.com/sales_partners**